kramer

TBUS

connectivity solutions catalog

Simple, elegant tabletop connectivity solutions

Easy and reliable tabletop connectivity that is easy to maintain and use, with versatile configurations designed for today's meeting room furniture.

Easy to install, reliable table-mount connectivity

Easily install and maintain table-mount connectivity solutions that leverage the latest technology and meet evolving charging and presentation needs.

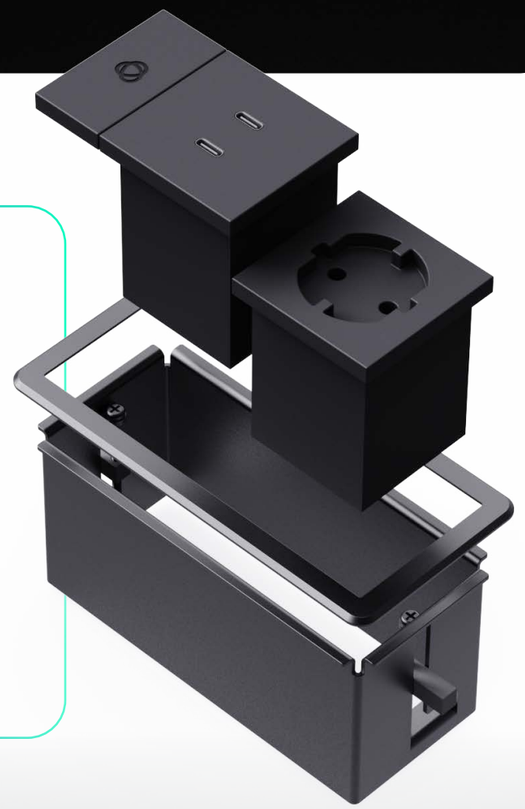

Easy installation and maintenance

Install all units and modules quickly and easily, without crawling under the table.

Simply attach the frame from above and secure it with the dog-ear brackets. Then slide each module into position to lock it in place. Installed modules can be removed and replaced easily, from the top of the table, using the slide and lock mechanism – no screws involved!

Any single module can be replaced without removing other modules, enabling hassle-free fixes and updates.

Advanced technology

Sleek connectivity solutions that offer fast charging: Multiple USB-C ports ensure fast 130W charging, to support all meeting participants and multiple fully featured USB-C 3.2 Gen2 ports, support active presenters

Proven reliability

As a Kramer product, TBUS is backed by our long legacy of AV connectivity expertise and reputation for producing dependable and sturdy products, proven across 40 years in the market.

The cable retractor has endured 7,500 testing cycles to ensure long-lasting durability, and all TBUS products comply with global industry standards, including CE, FCC, UL, CB, BIS, and many others.

endured
7,500
testing cycles

Designed for sustainability

TBUS products come in smart packaging that uses minimal materials, leaving less waste and raw materials to dispose of.

The product supply chain has been optimized to minimize carbon footprint from production to delivery. All components are recyclable and follow ROHS / REACH standards.

Designed with end-users in mind

Keep tabletops tidy and looking great, with sleek connectivity products that integrate with tabletop aesthetics and are designed for convenient use in today's dynamic meeting spaces.

Effortless use

Plugging-in and unplugging devices has never been easier.

The full-featured USB-C cable minimizes the need for multiple device cables, while the varied modules support all user devices and needs.

With all cable connections level with the table surface, users can find their connection without standing or fumbling in the dark below the tabletop.

Once connected, the LED power indicator lights up, confirming that all TBUS components are connected and ready to work.

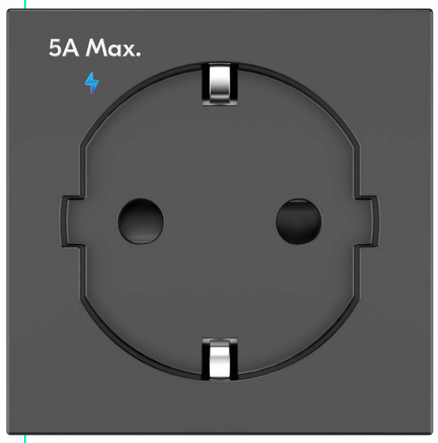

User-centric design

The built-in cable retractor eliminates snaking or tangled cables on or below the tabletop. It works smoothly and quietly and is placed parallel to the surface, hidden from view and out of the way of people's knees.

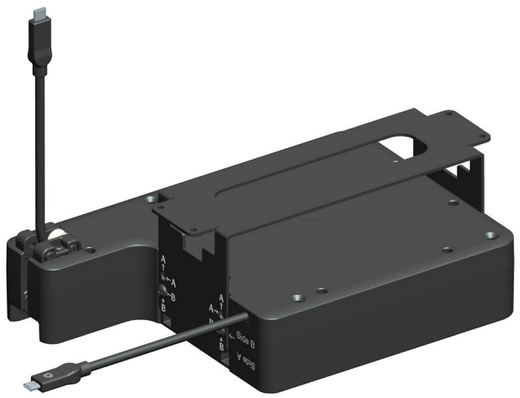

Minimalistic look and feel

Meeting modern aesthetics, TBUS has a smooth and minimal design that seamlessly blends with the tabletop.

The slide and lock installation ensures all modules are perfectly positioned without gaps. The outer frame is sleek and small, with narrow edges, and no visible screws.

The bezel and lid are available in a choice of three prestige colors to suit any table surface and room decor.

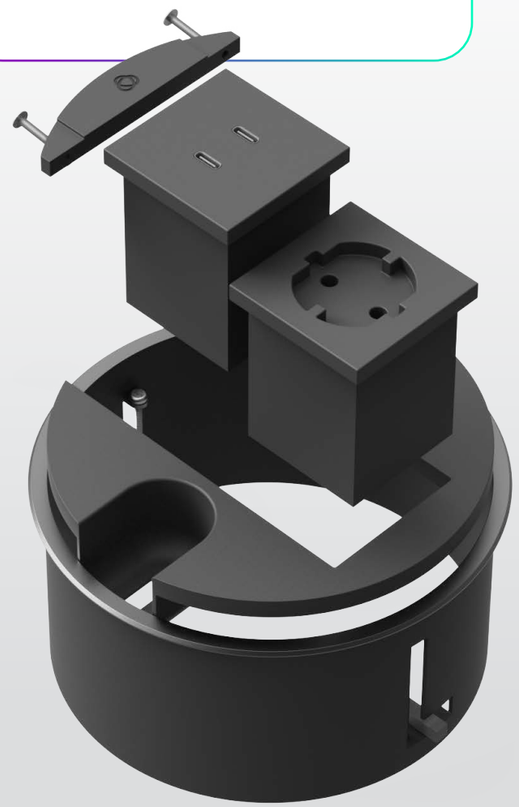

BLACK

WHITE & NATURAL ALUMINUM

WHITE

Learn more

https://www.kramerav.com/feat-products/tbus-tabletop-connectivity/

Modules

Our new TBUS product line offers a wide array of modules, designed to provide seamless connectivity and enhance the functionality of any meeting space.

With our versatile selection, you can easily customize your tabletop connectivity solutions to meet specific requirements, ensuring a neat and efficient workspace.

Whether you need power sockets, charging modules, data modules, or general pass-through modules, each component is crafted to integrate effortlessly into the TBUS system. Available in two elegant colors — Graphite Black (RAL 9011) and Broken White (RAL 9002) — these modules provide the flexibility to create a tailored setup that keeps your workspaces organized and your connections reliable.

Explore the variety of options below to create a tailored setup that keeps your workspaces organized and your connections reliable.

Module	Description	
Data (MD)		
MD-2C/2CM **MD-C/CM**	**Passive module** 1 or 2 USBC full full-featured - 4K@60 (4:4:4); 10Gbps; 100W power charging Input: Female	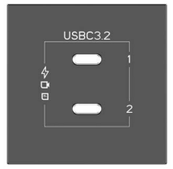
MD-H+B/AF	**Passive module** 1 HDMI port 1 USB-B port Input: Female Output: HDMI + USBA - Female	
MD-2RJ45	**Passive module** Input: 2 RJ45 ports Output: 2 Females	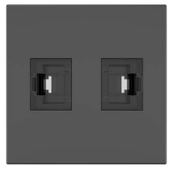

Module	Description	
Power socket (MP)*		
MP-U	Universal power socket	
MP-US	US power socket	
MP-DE	Europe power socket	
MP-GB	United Kingdom power socket	
MP-IL	Israel power socket	
Charging (MC)		
MC-2C130W	2 ports USBC 130W 100W when one port is connected, 65W each when both ports are connected	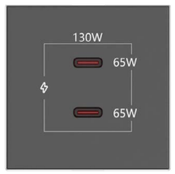
MC-C65W/A18W	USBC 65W port + USBA 18W port	

* More power sockets coming soon

Module	Description	
Pass-through / General (M)		
M-BLANK	Blank module to fill the gap when using 50x25 module	
M-LOCK	Locking device for all Rectangle frames	
MCP-1	Pass-through module with 1 hole	
MCP-2	Pass-through module with 2 holes	
T-REC-5-HDMI	Retractor for HDMI - cable 170cm length	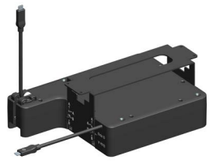
T-REC-5-U32/FF	Retractor for U32/FF - cable 170cm length	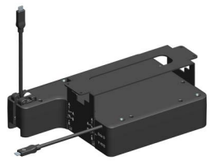

In-Table TBUS

In-Table rectangular tabletop connectivity solution for 2 modules

- Table cutout dimensions:
  131 x 58mm (5.16” x 2.28”)
- Outer dimensions (L, W, H):
  142 x 66 x 77mm (5.59” x 2.6” x 3.03”)

T-IN2-REC1 Baseline

- Table cutout dimensions:
  134 X 89mm (5.28” x 3.5”)
- Outer dimensions (L, W, H):
  142 X 99.5 x 113mm (5.59 x 3.91” x 4.45”)

T-IN2-REC2 Plus

Optional colors Black - RAL 9011 White – RAL 9002 Aluminum Natural

In-Table rectangular tabletop connectivity solution for 4 modules

- Table cutout dimensions:
  231 x 58mm (9.09” x 2.28”)
- Outer dimensions (L, W, H):
  242 x 66 x 77mm (9.53” x 2.6” x 3.03”)

T-IN4-REC1 Baseline

- Table cutout dimensions:
  234 x 89mm (9.21” x 3.5”)
- Outer dimensions (L, W, H):
  242 x 99.5 x 113mm (5.59” x 3.91” x 4.45”)

T-IN4-REC2 Plus

Optional colors Black - RAL 9011 White – RAL 9002 Aluminum Natural

In-Table rectangular tabletop connectivity solution for 6 modules

- Table cutout dimensions:
  331 x 58mm (13.03” x 2.28”)
- Outer dimensions (L, W, H):
  342 x 66 x 77mm (13.46” x 2.6” x 3.03”)

T-IN6-REC1 Baseline

- Table cutout dimensions:
  334 x 89mm (13.15” x 3.5”)
- Outer dimensions (L, W, H):
  342 x 99.5 x 113mm (13.46” x 3.91” x 4.45”)

T-IN6-REC2 Plus

Optional colors Black - RAL 9011 White – RAL 9002 Aluminum Natural

In-Table rounded tabletop connectivity solution for 2 modules

- Table cutout dimensions: Ø139 mm (5-1/2”)
- Outer dimensions (L, W, H): Ø146 x 82mm (5-3/4” x 3.22”)

T-IN2-RND1 Baseline

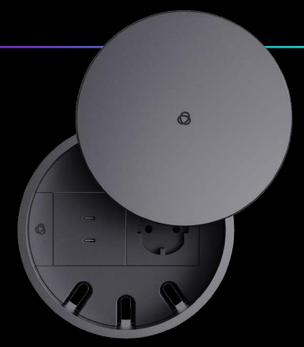

T-IN2-RND2 Plus

Optional colors Black - RAL 9011 White – RAL 9002

About Kramer

Kramer audio-visual experiences power creativity, collaboration, and engagement. From AVSM to advanced cloud-based communication, collaboration and control solutions, Kramer creates audio-visual experiences that are more engaging, more inclusive and more connected than ever before. Headquartered in the heart of Startup Nation - Tel Aviv, Israel, with locations around the world, Kramer's audio-visual experts are designing the future of engagement technology. Physical and digital boundaries have blurred. But no matter how hybrid our world becomes, our desire for real, human connection will never cease. Kramer's intuitive, seamless technology breaks down walls, bridges gaps, and makes people feel closer together even when they're far apart.

kramer

www.kramerav.com

© November 2024 KRAMER ELECTRONICS, Ltd. All rights reserved.
Reproduction in whole or in part without written permission is prohibited.